DR30D, DR30DH, DR30DI, DR30DIH

dacor The Life of the Kitchen®

Distinctive™ 30” Wide Dual Fuel Range

PLANNING GUIDE

Product tolerances: ±1/16” (±1.6 mm) unless otherwise stated.

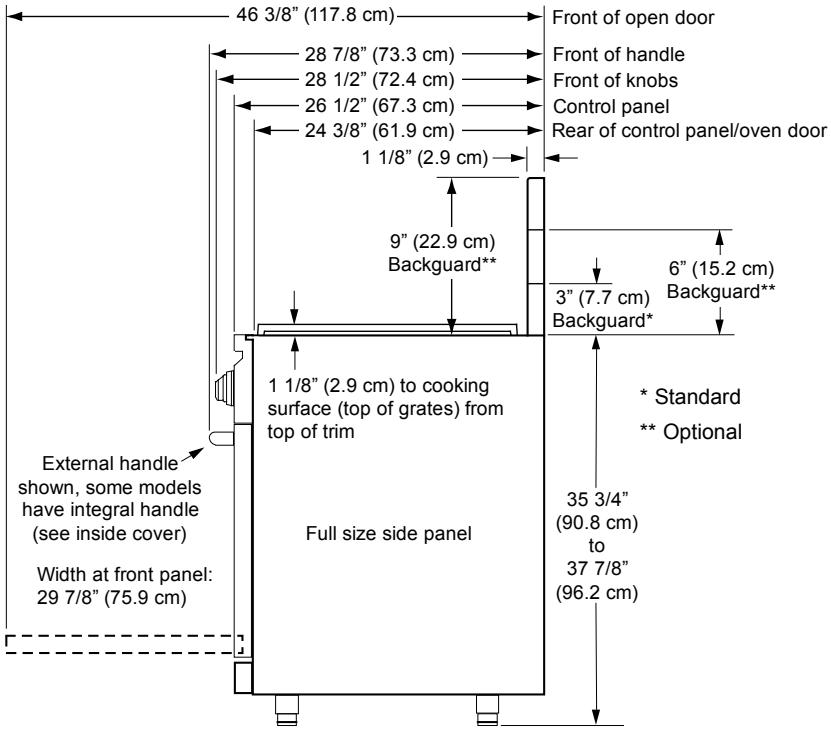

PRODUCT DIMENSIONS - MODEL DR30D[H] (FREESTANDING MODEL)

⚠ WARNING

- Observe all governing codes and ordinances during planning and installation. Contact your local building department for further information.
- This appliance must be installed in accordance with the accompanying installation instructions.

Optional Backguard and Island Trim Part Numbers	
Description	**Part Number**
Island trim kit (no backguard)	ADTK30D
6 inch trim kit	ADB3006
9 inch trim kit	ADB3009

NOTE: Model DR30D[H] is NOT designed for self-rimming installation or installation with a raised vent.

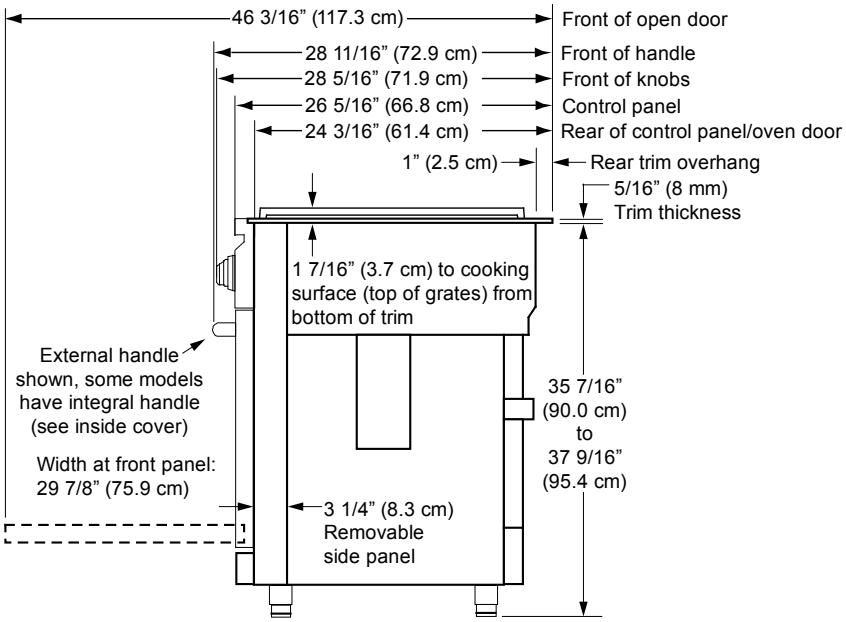

PRODUCT DIMENSIONS - MODEL DR30DI[H] (SELF-RIMMING MODEL)

NOTES:

- When installing model DR30DI[H] with a raised vent, install **only** Dacor model ERV3015.
- The backguards shown above for model DR30D[H] **are NOT** compatible with model DR30DI[H].
- This model can be installed in a freestanding configuration between cabinets, provided the countertop is as high at the trim around the cooktop.

AMERICAN MADE · FAMILY OWNED

Gas and Electrical Requirements

Gas Supply Pressure Requirements*		
Gas Type	**Manifold Pressure**	**Minimum Gas Supply Pressure**
Natural gas	5” water column	6” water column
LP	10” water column	11” water column

* Maximum input gas supply pressure for all models is 1/2 psi

The regulator inlet accommodates a 3/4” gas line. The range ships with a 1/2” to 3/4” adapter connected to the regulator.

Electrical Specifications	
Circuit Required	**Total Connected Load**
240 Vac, 60 Hz., 30 Amp.*	5.7 kW (23.8 Amp.)

* Two 120 Vac hot (L1 and L2), one neutral, one ground

- The ratings above are for reference only - refer to the range's product data label for exact specifications.
- The correct voltage, frequency and amperage must be supplied to the appliance from a separate, grounded, circuit that is protected by a properly sized circuit breaker or time delay fuse. If a time-delay fuse is utilized, fuse both sides of the line (L1 and L2).

Ranges equipped for installation in Canada:

- Freestanding ranges used in Canada require a factory installed 4-wire appliance cord and NEMA 14-50P plug. Order model number DR30D-C or DR30DH-C. The appliance cord is 66 inch (168 cm) long.
- Do not modify the factory wiring. The plug is designed to plug directly into a NEMA 14-50R electrical receptacle installed by a licensed electrician.

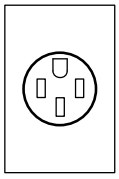

NEMA 14-50R RECEPTACLE

All other models:

The wiring needs to be long enough to allow the range to be pulled out for service, while remaining connected (see following page).

The wiring connected to the range must:

- Meet NEMA standards and have a minimum rating of 250 Volts @ 30 Amp.
- Include a strain relief.
- Be terminated by tinned leads, closed loop terminals or open ended spade lugs with upturned ends.
- Connect to a junction box or receptacle installed by a licensed electrician.

Where local code permits, a 3 or 4 wire appliance cord may be used. It must:

- Be UL listed type SRD or SRDT.
- Be equipped with a NEMA 14-50P 4-wire plug or, where local code permits, a NEMA 10-50P 3-wire plug.

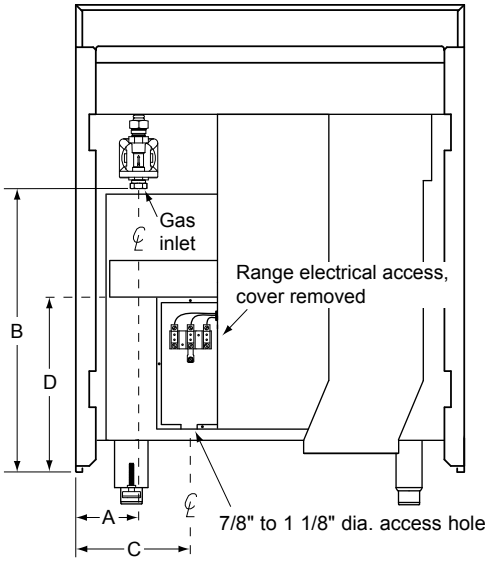

A	B	C	D
4 3/4” (12.1 cm)	22 1/8” (56.2 cm)	8 3/4” (22.2 cm)	13 3/4” (34.9 cm)

GAS AND ELECTRICAL DIMENSIONS

dacor The Life of the Kitchen®

Distinctive 30” Wide Dual Fuel Range

PLANNING GUIDE

Cabinet Layout

- Carefully check the location where the range is to be installed. For best performance, the range should be placed away from drafts that may be caused by doors, windows and heating and air conditioning outlets.
- To reduce the risk of personal injury and to reduce accumulated smoke in the room, Dacor strongly recommends installing a range hood or raised vent (model DR30DI[H] only). A range hood should project horizontally a minimum of five (5) inches beyond the face of the cabinets.
- All maximum and minimum dimensions and clearances shown in the diagram below must be maintained for safe operation.
- Any openings in the wall behind the appliance or in the floor underneath it must be sealed.
- Carefully note the requirements stated below for clearances to walls and cabinets.

Cabinet tolerances: -1/16”, (+1.6 mm) -0

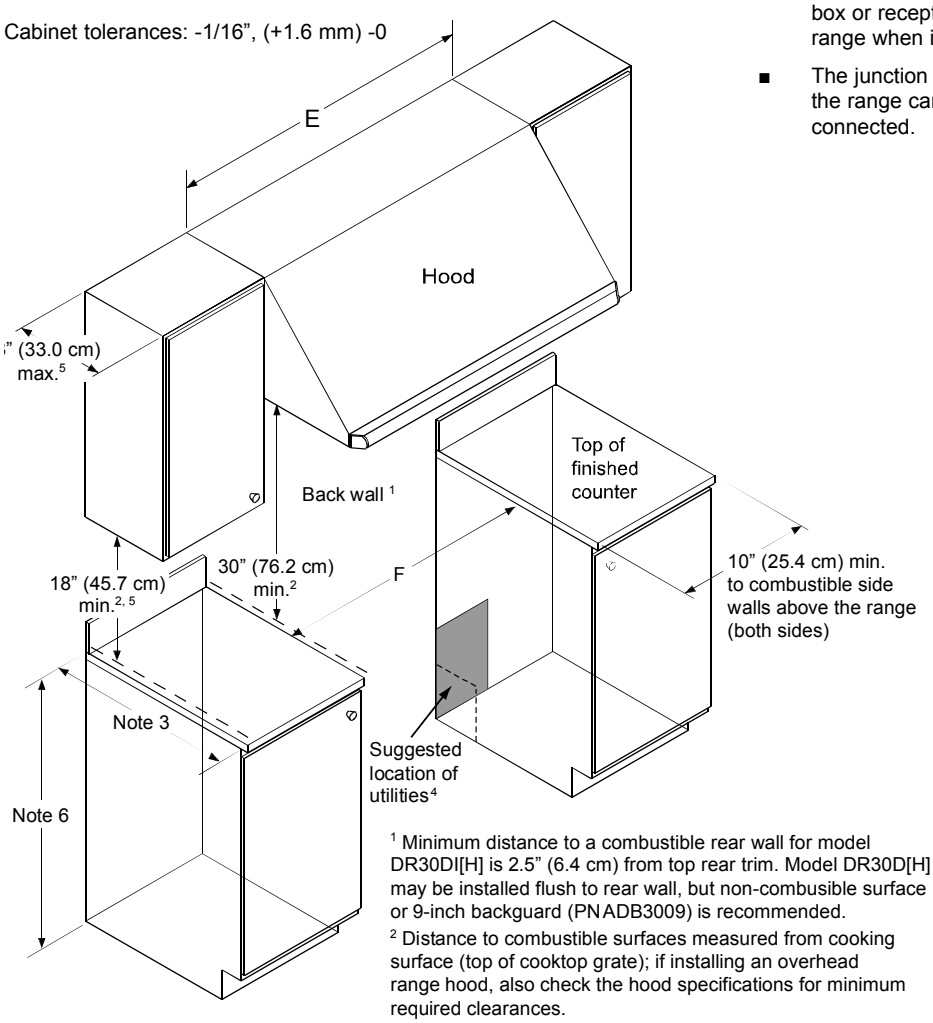

REQUIRED CABINET DIMENSIONS

[1] Minimum distance to a combustible rear wall for model DR30DI[H] is 2.5” (6.4 cm) from top rear trim. Model DR30D[H] may be installed flush to rear wall, but non-combusible surface or 9-inch backguard (PNADB3009) is recommended.

[2] Distance to combustible surfaces measured from cooking surface (top of cooktop grate); if installing an overhead range hood, also check the hood specifications for minimum required clearances.

[3] Cabinet/countertop depth is at discretion of customer but cabinet face MUST NOT protrude further than rear of cabinet front, see Product Dimensions.

[4] Consult local code for exact location requirements.

[5] This specification does not apply for cabinets located greater than a horizontal distance of 10” (25.4 cm) from the edge of the range.

[6] Model DR30D[H]: 37 7/8 (96.2 cm) max.
Model DR30DI[H]: 37 7/16 (95.1 cm) max.

Gas and Electrical Service

- The shaded area shown below denotes the location of the gas inlet and the electrical junction box/receptacle. This is the recommended location. For replacement purposes, the location of the existing utilities may be utilized provided they do not interfere with the sides or rear of the range. Check local building codes for permissible gas valve locations.
- An external manual shut-off valve must be installed between the gas inlet and the range for the purpose of turning on or shutting off gas to the appliance.

The installation must allow for the following:

- Access to the gas shut-off valve when the unit is installed.
- Access to the remote circuit breaker panel/fuse box when the range is in place.
- The gas supply piping, gas shut-off valve and the electrical junction box or receptacle must be located so they do not interfere with the range when it is installed.
- The junction box and gas shut off valve must be located so that the range can be pulled out for service while the appliance remains connected.

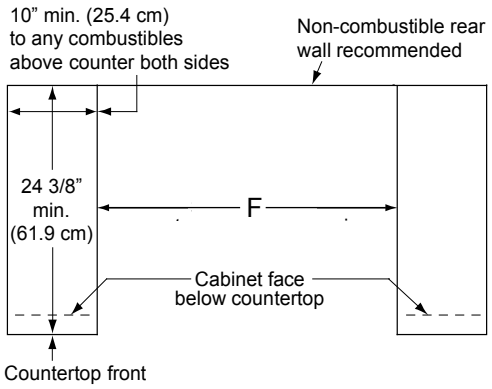

CUTOUT FOR MODEL DR30D[H] WITH SELF-RIMMING TRIM KIT PN ATKDR30DW-01

Cutout Dimensions	
E	**F*** **
36” (91.4 cm)* 30” (76.2 cm)**	30 1/16” (91.6 cm)
* Recommended ** Minimum *** See following page for model DR30DI[H]	

Model DR30DI[H] Self-Rimming Installation Without Raised Vent

- See pages 5/7 - 7/7 for raised vent installations.
- Self-rimming installations create a “built-in” look where the trim of the range overlaps the surrounding countertop. It is also possible, if the cabinets are the right depth, to self rim the front of the range into the cabinet face, immediately behind the control panel and door trim. When the front of the range is self-rimmed, the 3 1/4” side panels are removed.
- It is not possible to self-rim the front of the range with countertop cutouts that are 30 inches wide.

Cabinet tolerances: -1/16”, (+1.6 mm) -0

Model DR30DI[H] Range with	H	J	K
Option 1	21” (53.3 cm)	0” (0 cm) to 3 1/4” (8.3 cm)	0” (0 cm) to 5 3/8” (13.7 cm)
Option 2[1]	24 1/4” (61.6 cm)	NA	0” (0 cm) to 2 1/8” (5.4 cm)

[1] Side panels removed

Countertop height for all self-rimming installations:
35 7/16” (90.0 cm) minimum, 37 7/16” (95.1 cm) maximum

OPTION 1:
CUSTOM COUNTERTOP/STANDARD CABINET, TOP SELF-RIMMED ONLY, 3 1/4 INCH SIDE PANELS NOT REMOVED

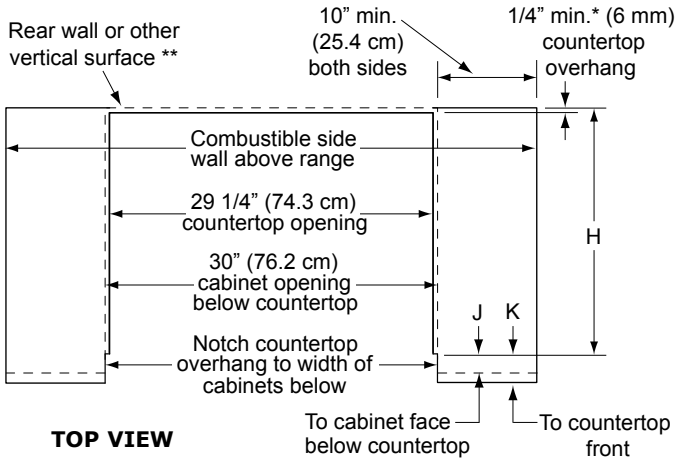

* When increasing overhang, increase dimension H by same amount.

** Any vertical surfaces behind the range must be non-combustible unless countertop overhang exceeds 2 3/4” (7.0 cm).

OPTION 2:
CUSTOM COUNTERTOP AND CABINET, TOP AND FRONT SELF-RIMMED, 3 1/4 INCH SIDE PANELS REMOVED

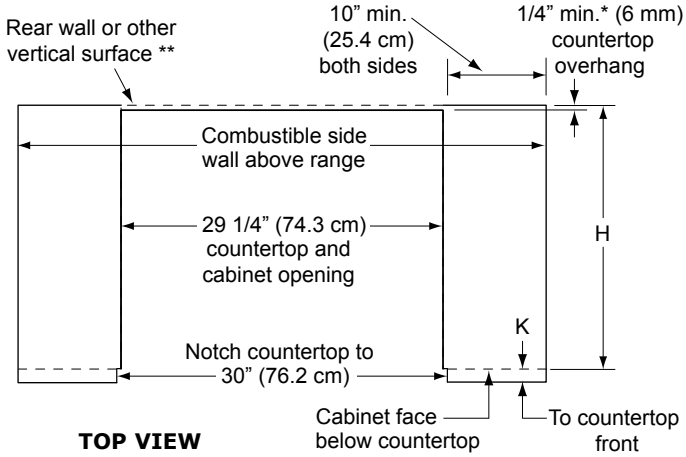

* When increasing overhang, increase dimension H by same amount.

** Any vertical surfaces behind the range must be non-combustible unless countertop overhang exceeds 2 3/4” (7.0 cm).

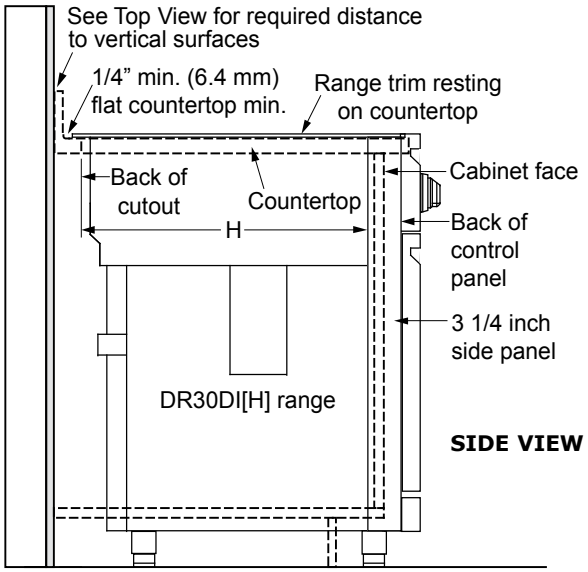

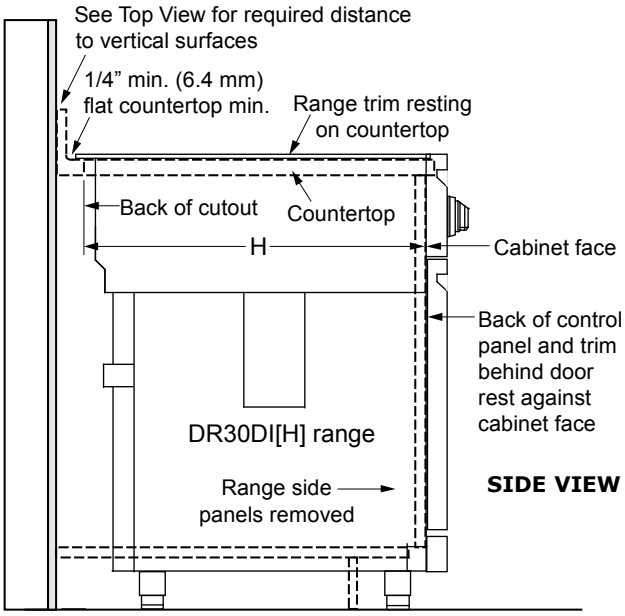

Model DR30DI[H] Self-Rimming Installation Without Raised Vent (cont.).

OPTION 3: STANDARD COUNTERTOP AND CABINET, TOP SELF-RIMMED ONLY, 3 1/4 INCH SIDE PANELS NOT REMOVED - ATKDR30DW-02 TRIM KIT REQUIRED

Cabinet tolerances: -1/16”, (+1.6 mm) -0

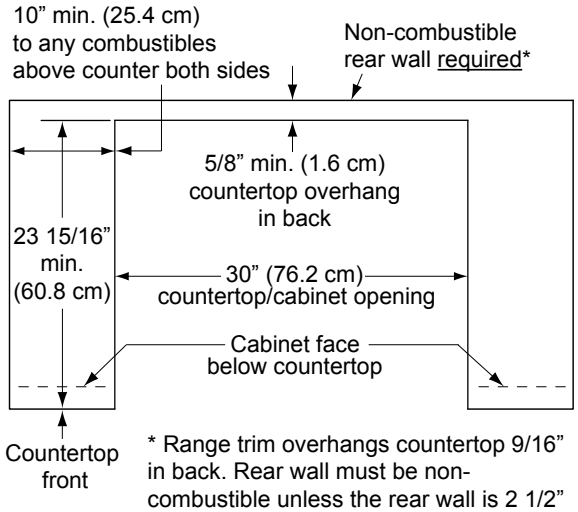

* Range trim overhangs countertop 9/16” in back. Rear wall must be non-combustible unless the rear wall is 2 1/2” (6.4 cm) or more from range rear trim.

TOP VIEW

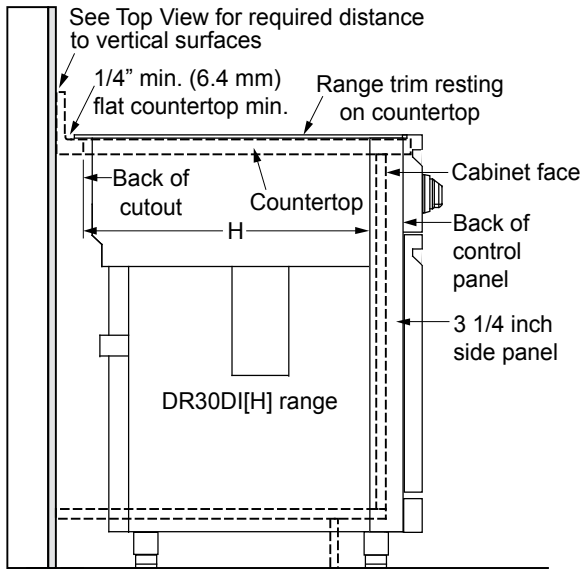

SIDE VIEW

DR30DI[H] Self-Rimming Installation With Raised Vent

- Only model DR30DI[H] may be installed with a raised vent. Use only Dacor raised vent model ERV3015.
- A self-rimming countertop configuration is required for raised vent installation. self-rimming installation of the range and raised vent create a “built-in” look where the range trim overlaps the countertop on both sides and the raised vent overlaps the countertop in back. It is also possible, if the cabinets are deep enough, to self rim the front portion of the range into the cabinet face immediately behind the control panel and door trim or behind the side panels. The rear range trim will partially cover the front of the raised vent chassis in back.

H	J	K
20 5/8” (52.4 cm)	0” (0 cm) to 3 1/4” (8.3 cm)	0” (0 cm) to 5 3/8” (13.7 cm)

OPTION 1: RANGE/RAISED VENT COMBINATION WITH CUSTOM COUNTERTOP/STANDARD CABINET, TOP SELF-RIMMED ONLY, 3 1/4 INCH SIDE PANELS NOT REMOVED

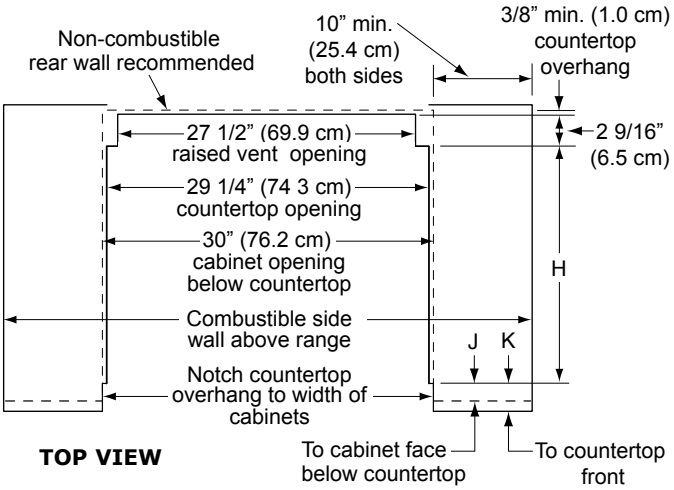

TOP VIEW

Countertop height: min: 35 7/16” (90.0 cm) max: 37 7/16” (95.1 cm)

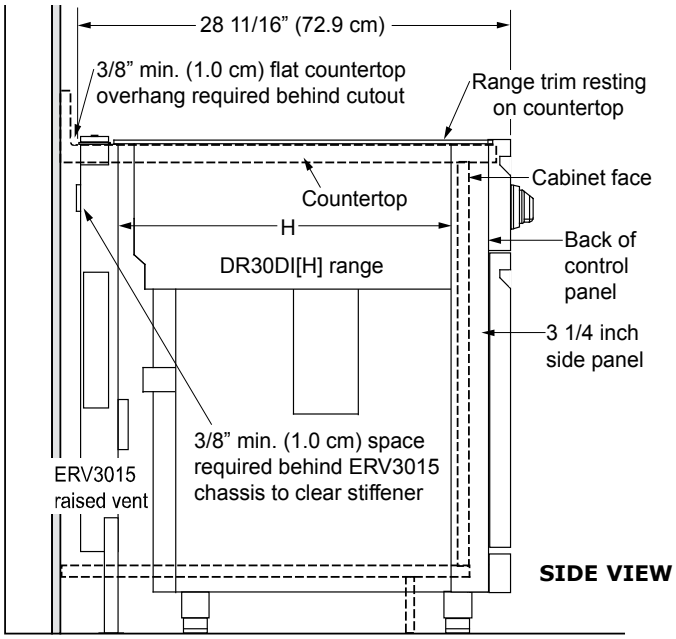

SIDE VIEW

DR30DI[H] Self-Rimming Installation With Raised Vent (cont.)

OPTION 2: RANGE/RAISED VENT COMBINATION WITH CUSTOM COUNTERTOP AND CABINET, TOP AND FRONT SELF-RIMMED, 3 1/4 INCH SIDE PANELS NOT REMOVED

Cabinet tolerances: -1/16”, (+1.6 mm) -0

H	K
20 5/8” * (52.4 cm)	0” (0 cm) to 5 3/8” (13.7 cm)

* Cabinet face below countertop must be flush with back of notch in countertop

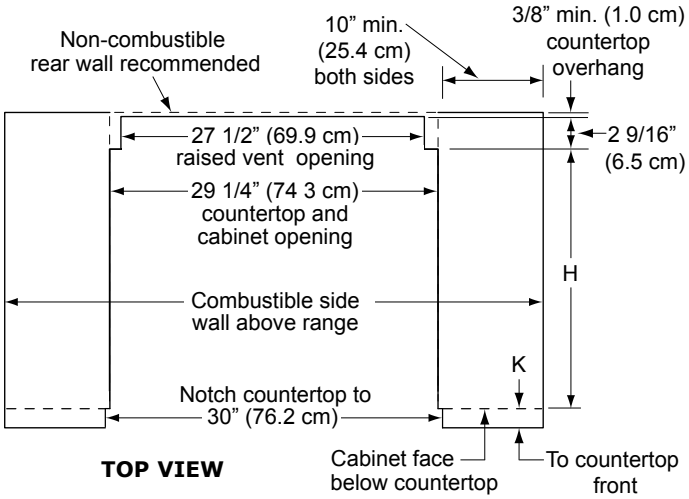

Countertop height: min: 35 7/16” (90.0 cm) max: 37 7/16” (95.1 cm)

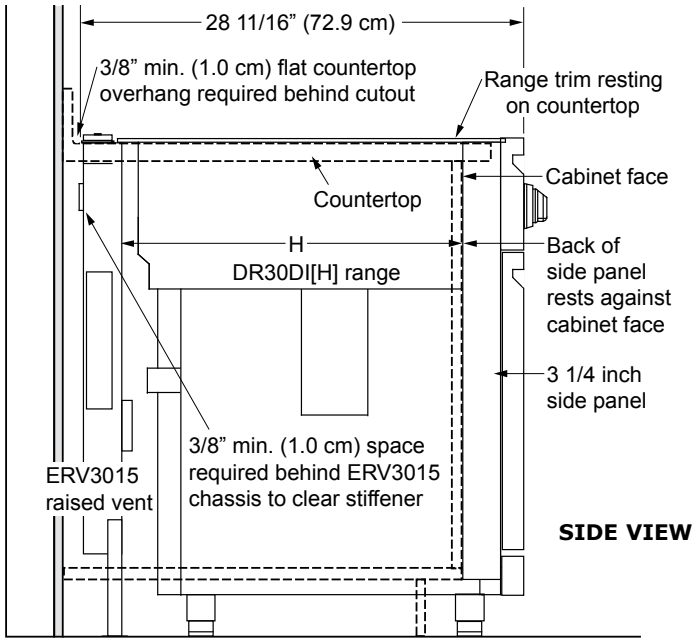

OPTION 3: RANGE/RAISED VENT COMBINATION CUSTOM COUNTERTOP AND CABINET, TOP AND FRONT SELF-RIMMED, 3 1/4 INCH SIDE PANELS REMOVED

Cabinet tolerances: -1/16”, (+1.6 mm) -0

H	K
23 7/8” * (60.6 cm)	0” (0 cm) to 2 1/8” (5.4 cm)

* Cabinet face below countertop must be flush with back of notch in countertop

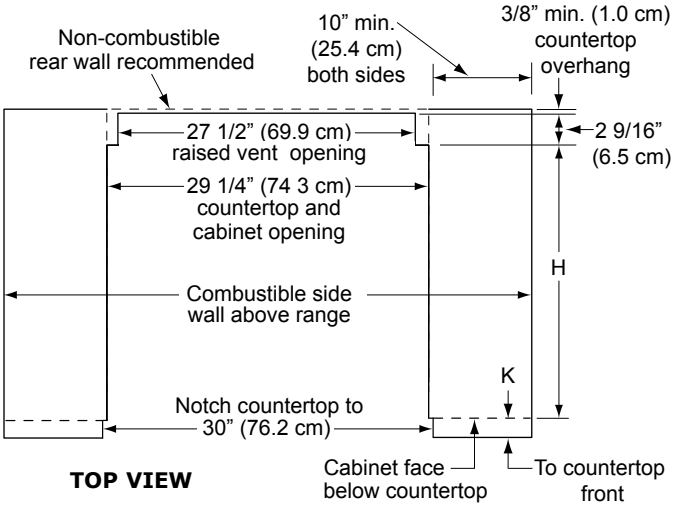

Countertop height: min: 35 7/16” (90.0 cm) max: 37 7/16” (95.1 cm)

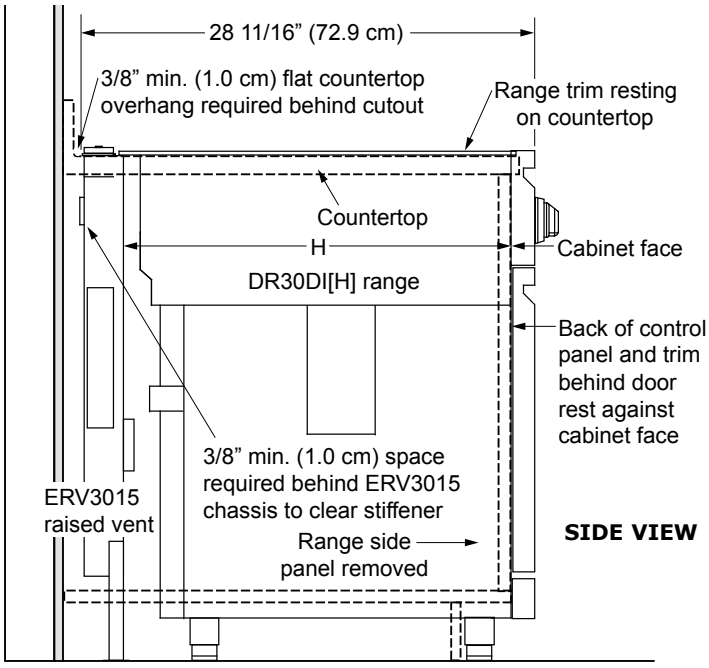

Model DR30DI[H] Self-Rimming Installation Without Raised Vent (cont.).

OPTION 4: RANGE/RAISED VENT COMBINATION WITH STANDARD COUNTERTOP AND CABINET, TOP SELF-RIMMED ONLY, 3 1/4 INCH SIDE PANELS NOT REMOVED, ATKDR30DW-03 TRIM KIT REQUIRED

Cabinet tolerances: -1/16”, (+1.6 mm) -0
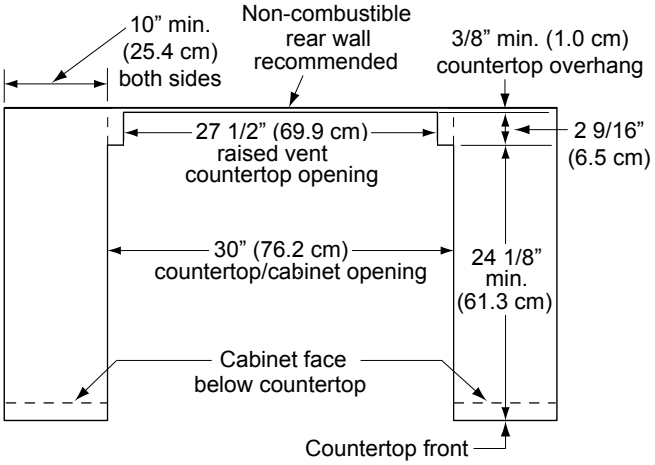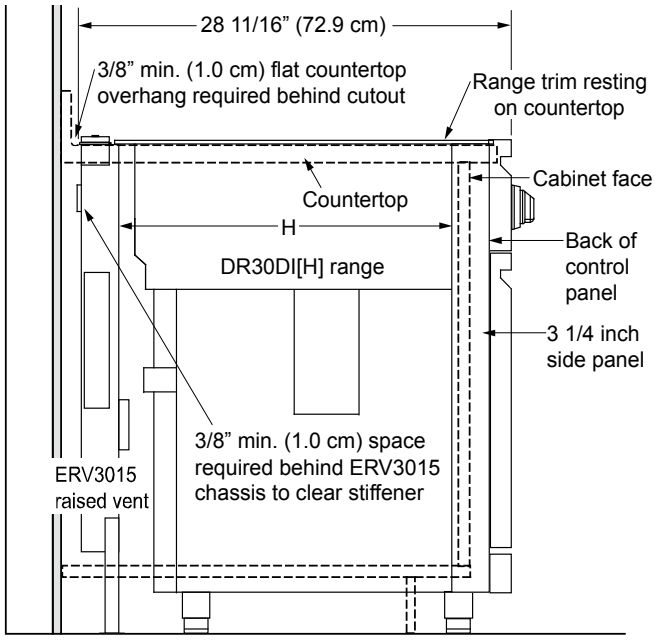
Countertop height for all self-rimming installations:
35 7/16” (90.0 cm) minimum, 37 7/16” (95.1 cm) maximum