EF36BNNF

dacor
The Life of the Kitchen.®

Renaissance® 36” Wide Freestanding Refrigerator

PLANNING GUIDE

⚠ WARNING

- Observe all governing codes and ordinances during planning and installation. Contact your local building department for further information.
- This appliance must be installed in accordance with the accompanying installation instructions.

Product Dimensions

◊ The depth from the front of the door (w/o door handles) to the back of the refrigerator chassis is 27” (68.6 cm).

◊ The depth of the cabinet less the door is 24 1/4” (61.6 cm).

◊ The power cord is 60” (152.4 cm) long.

◊ The height from the top of the refrigerator to the floor with the leveling legs in the down position is 69 15/16” (177.6 cm), 71 7/8” (182.6 cm) with the optional top trim kit (Part # AFG36).

◊ The height from the top of the refrigerator to the floor with the leveling legs in the fully extended position is 70 9/16” (179.2 cm) at the front of the unit, 72 1/2” (184.2 cm) with the optional top trim kit (Part # AFG36).

◊ The refrigerator width from edge to edge is 35 5/8” (90.5 cm).

Location Requirements

The refrigerator can be recessed in an opening between cabinets or installed at the end of a cabinet run using a side panel to enclose it.

◊ To ensure proper ventilation, allow for a 1/2” (1.3 cm) space on both sides and at the top of the refrigerator. Allow for 1" (2.5 cm) behind.

◊ The location must allow the refrigerator to be moved out from the wall without being disconnected if service is required.

◊ Do not install the refrigerator in a location where the temperature will fall below 55°F (13°C).

◊ Allow a minimum of 2 1/2” (6.4 cm) space between the side of the refrigerator and an oven or range.

◊ The floor must be able to support the refrigerator’s weight of more than 330 lbs (150 kg), the door panels and the refrigerator contents.

◊ The area to the left and the right of the appliance must permit both doors to open to a minimum of 90°. Allow space between the side of the refrigerator doors and a corner wall for the handle and/or custom door panels.

Cabinet Layout

◊ A grounded three prong non-GFCI electrical outlet must be provided and should be in a location that allows the refrigerator to be connected without an extension cord. See “Electrical Requirements” for additional information.

◊ The plumbing for the water line can come through the floor flush to or from the back wall. Install the water valve in a location that allows it to be turned off without moving the refrigerator out in the event the refrigerator or water line requires service.

Electrical Requirements

A 115 Volt, 60 Hz. AC only 15 or 20 Amp. fused, grounded electrical supply is required. It is recommended that a separate circuit serving only your refrigerator be provided. Use an outlet that cannot be turned off by a switch. Do not use an extension cord.

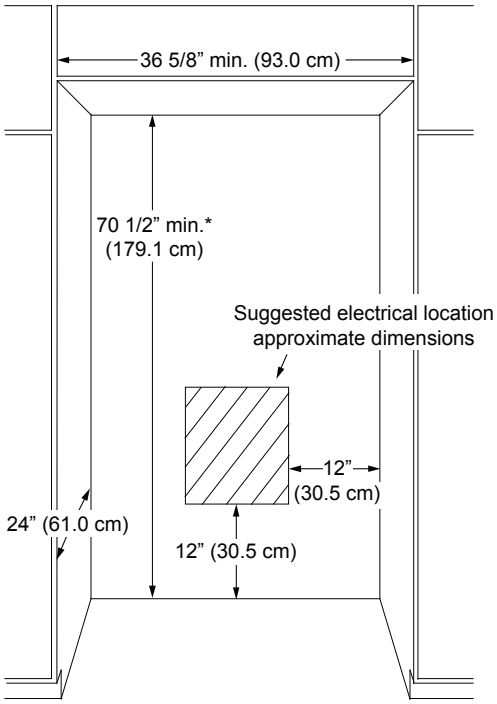

*Add 1 3/4” (4.4 cm) for the optional top gril kit (AFG36).

Water Supply Requirements

◊ A cold water supply with water pressure of between 35 and 120 psi (241 and 827 kPa) is required to operate the water dispenser and ice maker. If you have questions about your water pressure, call a licensed, qualified plumber.

◊ Install a shut off valve between the refrigerator and water supply. Use 1/4” copper tubing with a compression nut and compression sleeve and check for leaks. Allow a minimum of 24” (61.0 cm) diameter service loop of copper tubing outside the wall or floor for easy connection to the water supply. Install copper tubing only in areas where the household temperatures will remain above freezing.

◊ Do not use a piecing type or 3/16” (5 mm) saddle valve which will reduce water flow and clog more easily.

Reverse Osmosis Water supply

IMPORTANT: The pressure of the water supply coming out of a reverse osmosis system going to the water inlet valve of the refrigerator needs to be between 35 and 120 psi (241 and 827 kPa).

If a reverse osmosis water filtration system is connected to your cold water supply, the water pressure to the reverse osmosis system needs to be a minimum of 40 to 60 psi (276 to 414 kPa).

Handle Dimensions

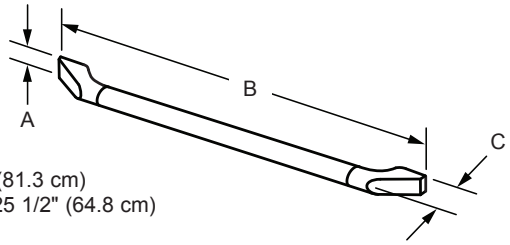

A = 13/16" (2.1 cm)
B refrigerator = 32" (81.3 cm)
B freezer drawer = 25 1/2" (64.8 cm)
C = 2 3/8" (6.0 cm)

EPICURE STYLE HANDLE DIMENSIONS (PN AFE36H3)

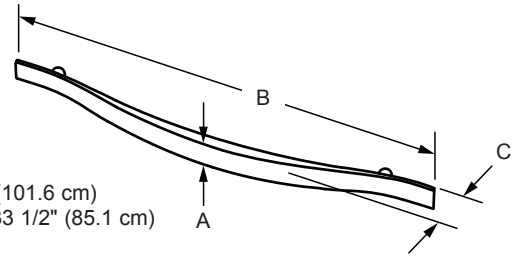

A = 1 1/2" (3.8 cm)
B refrigerator = 40" (101.6 cm)
B freezer drawer = 33 1/2" (85.1 cm)
C = 2 1/2" (6.4 cm)

MILLENNIA STYLE HANDLE DIMENSIONS
PN AFM36H3: NICKEL GRAIN FINISH
PN ARFMH36H3: #4 STAINLESS STEEL GRAIN FINISH

Optional AFG36 Trim Kit Dimensions

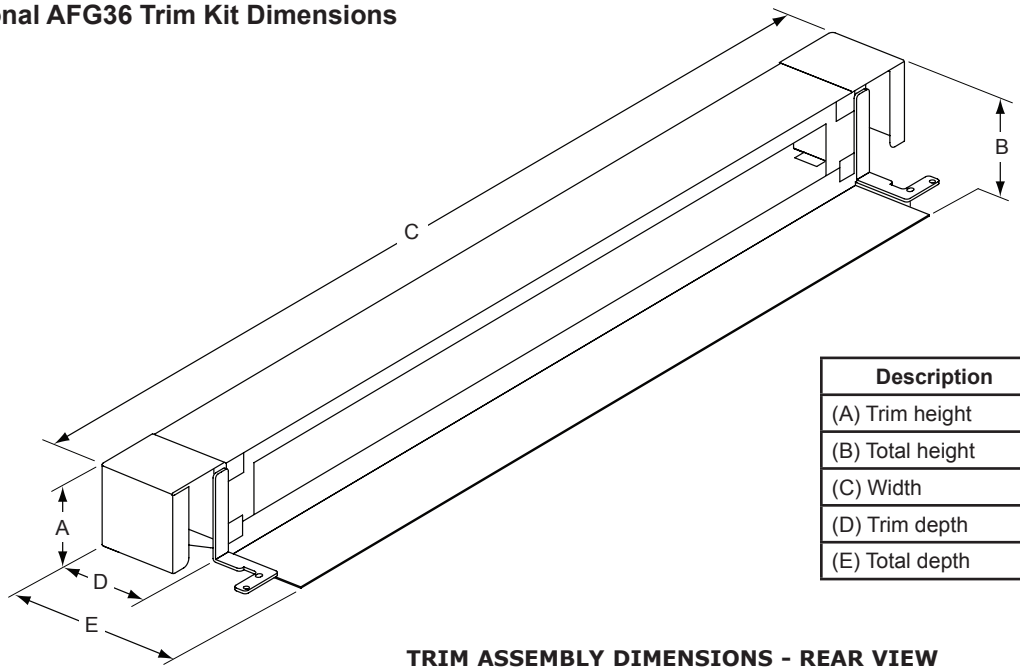

Description	Dimension
(A) Trim height	2 15/16” (7.5 cm)
(B) Total height	3 3/8” (8.6 cm)
(C) Width	35 5/8” (90.5 cm)
(D) Trim depth	3 3/16” (8.1 cm)
(E) Total depth	6” (15.2 cm)

TRIM ASSEMBLY DIMENSIONS - REAR VIEW

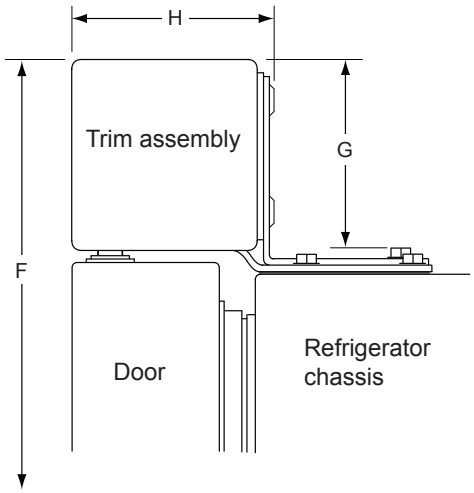

IMPORTANT: Allow additional space to avoid scraping during push back and vibration

Description	Dimension
(F) Distance to floor	71 7/8” (182.6 cm)* 72 1/2” (184.2 cm)**
(G) Trim height from top of refrigerator chassis	2 7/8” (7.3 cm)
(H) Depth	3 3/16” (8.1 cm)

* With leveling legs in down position
** With leveling legs in fully extended position

TRIM ASSEMBLY DIMENSIONS, INSTALLED - SIDE VIEW